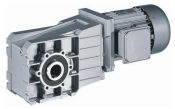

## Dimensions

**GKR□□-2M H□R**

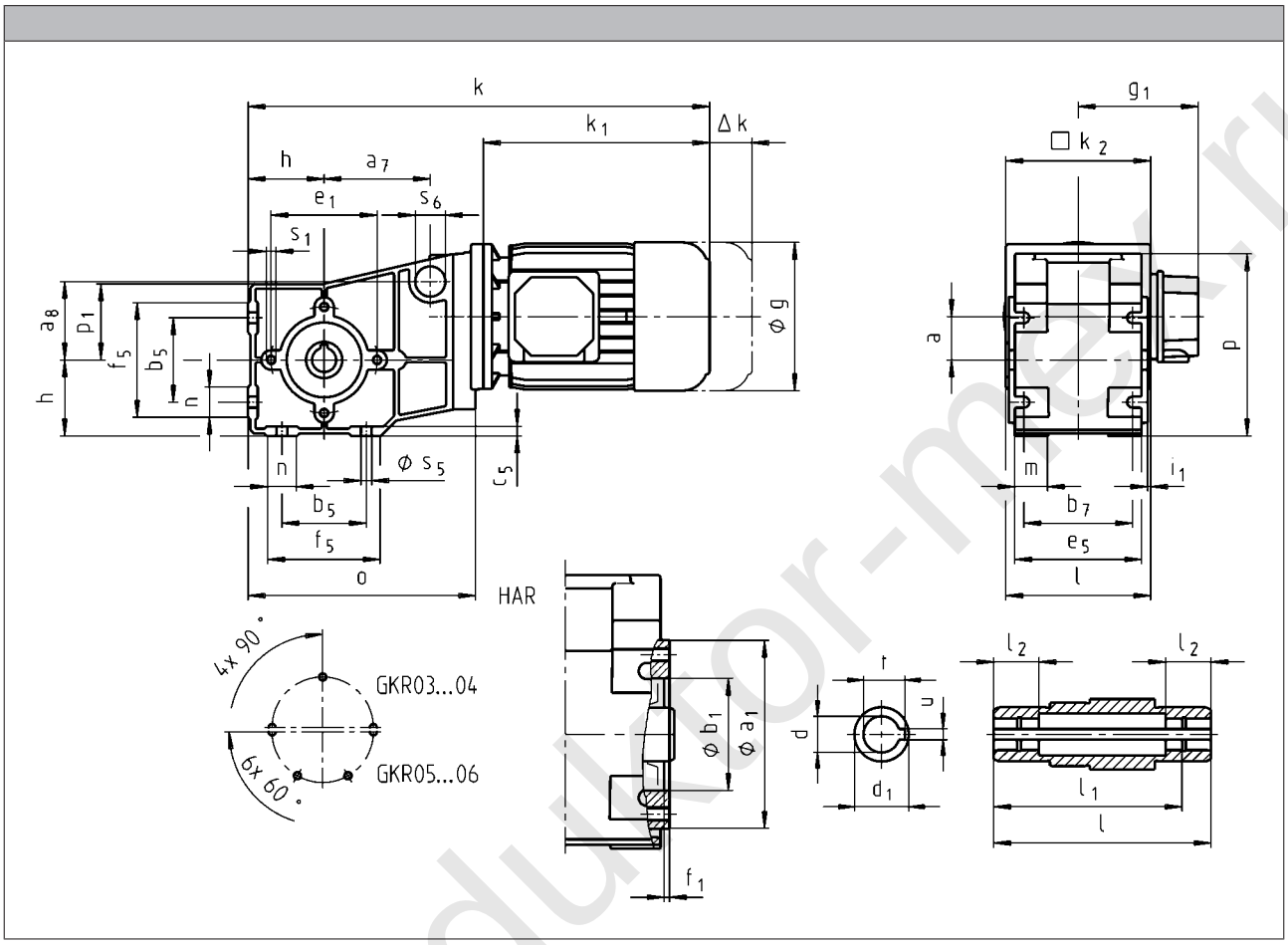


www.redukTor-max.ru

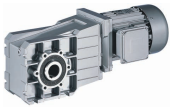

| | | 080C32 | 090C12 | 090C32 | 100C12 | 100C32 | 112C22 | 132C12<br>132C22 |
|---|---|---|---|---|---|---|---|---|
| g | | 156 | 176 | | 194 | | 218 | 258 |
| $g_1$ | MHEMAXX | 150 | 152 | 157 | 166 | | 176 | 195 |
| | MHEMABR | 132 | 137 | | 147 | | 158 | 187 |
| $k_1$ | MHEMAXX | 224.5 | 274 | | 309 | 324 | 363 | 403 |
| $k_2$ | | 145 | 180 | | | | 222 | 265 |
| Δ k | MHEMABR | 73 | 68 | | 76 | | 90 | 109.5 |
| | MHFMAXX | 128 | | | 109 | | 102 | 115 |
| | MHFMABR | 183 | 181 | | 170 | | 183 | 201.5 |
| | | k | | | | | | |
| | **GKR04** | 425 | 485 | | | | | |
| | **GKR05** | 479 | 538 | | 573 | 588 | | |
| | **GKR06** | 530 | 590 | | 625 | 640 | 685 | 733 |

| | a | $a_7$ | $a_8$ | h | o | p[1] | $p_1$ | $s_6$ |
|---|---|---|---|---|---|---|---|---|
| **GKR04** | 36 | 88 | 65 | 63 | 189 | 151 | 63 | 25 |
| **GKR05** | 40 | | | 80 | 250.5 | 181 | 82 | |
| **GKR06** | 51 | | | 100 | 307 | 226 | 100 | |

| | d[2] | $d_1$ | l[1] | $l_1$ | $l_2$ | u | t[3] | $i_1$ | $a_1$ | $b_1$ | $e_1$ | $f_1$ | $s_1$ |
|---|---|---|---|---|---|---|---|---|---|---|---|---|---|
| | H7 | | | | | JS9 | +0,2 | | | J7 | | | |
| **GKR04** | 20<br>25 | 30<br>35 | 120<br>120 | 105<br>105 | 25<br>25 | 6<br>8 | 22.8<br>27 | 2.5<br>2.5 | 104 | 62 | 88 | 3 | M8x16 |
| **GKR05** | 30<br>35 | 50<br>50 | 143<br>143 | 127<br>127 | 25<br>25 | 8<br>10 | 33.3<br>38.3 | 4<br>4 | 116 | 80 | 100 | 4 | M8x15 |
| **GKR06** | 40<br>45 | 65<br>65 | 170<br>170 | 150<br>150 | 30<br>30 | 12<br>14 | 43.3<br>48.8 | 5<br>5 | 140 | 100 | 120 | 4 | M10x22 |

| | $b_5$ | $b_7$ | $c_5$ | $e_5$ | $f_5$ | m | n | $s_5$ |
|---|---|---|---|---|---|---|---|---|
| **GKR04** | 70 | 90 | 8 | 105 | 95 | 28 | 25 | 9 |
| **GKR05** | 100 | 100 | 11 | 115 | 138 | 27 | 48 | 9 |
| **GKR06** | 120 | 125 | 12 | 145 | 164 | 32 | 53 | 11 |

[1] $k_2$ !
[2] $l_2$ !
[3] d = 25 mm > DIN 6885/3

www.redukt-or-mex.ru

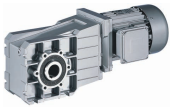

## Dimensions

**GKR□□-2M HAK**

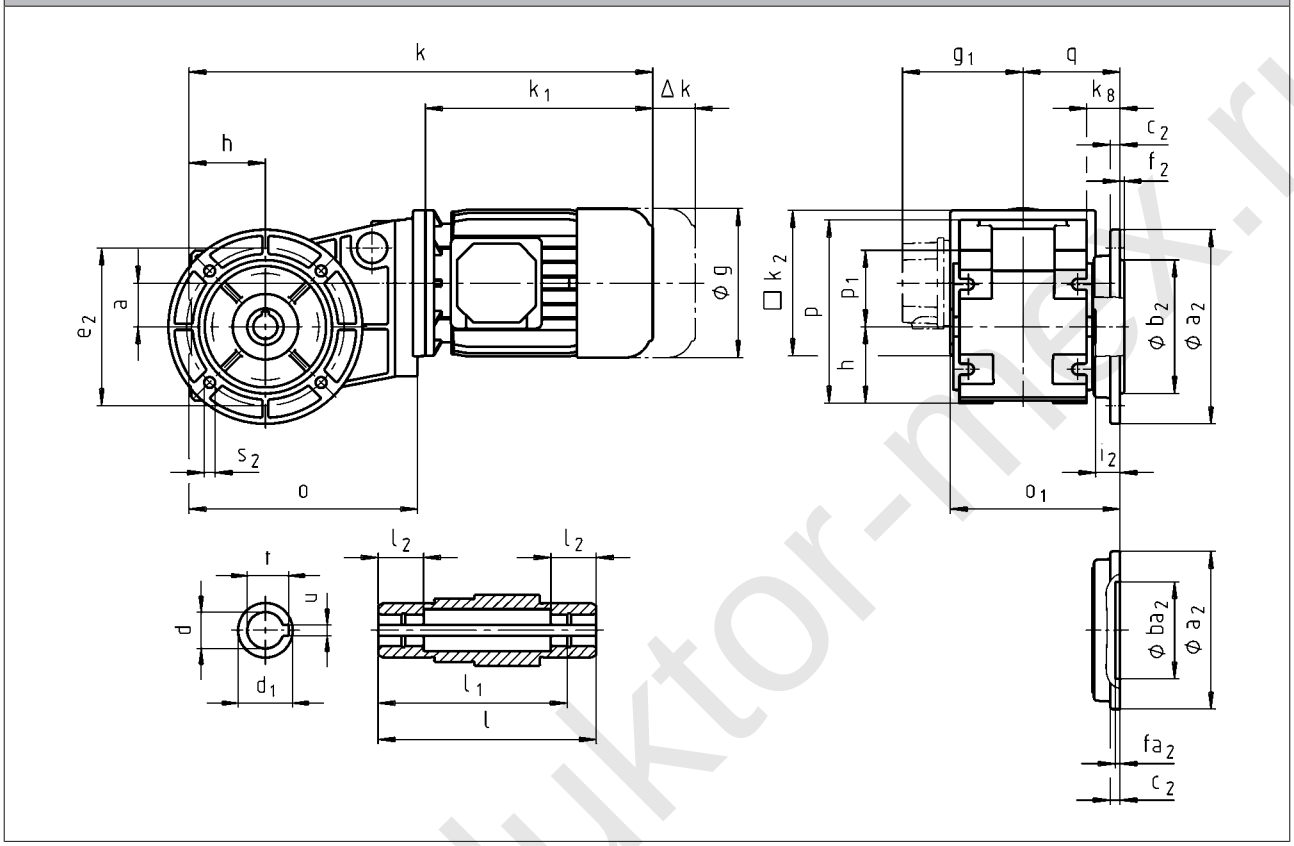


www.reduktor-max.ru

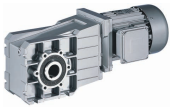

| | | 080C32 | 090C12 | 090C32 | 100C12 | 100C32 | 112C22 | 132C12<br>132C22 |
|---|---|---|---|---|---|---|---|---|
| g | | 156 | 176 | | 194 | | 218 | 258 |
| $g_1$ | MHEMAXX | 150 | 152 | 157 | 166 | | 176 | 195 |
| | MHEMABR | 132 | 137 | | 147 | | 158 | 187 |
| $k_1$ | MHEMAXX | 224.5 | 274 | | 309 | 324 | 363 | 403 |
| $k_2$ | | 145 | 180 | | | | 222 | 265 |
| Δ k | MHEMABR | 73 | 68 | | 76 | | 90 | 109.5 |
| | MHFMAXX | 128 | | | 109 | | 102 | 115 |
| | MHFMABR | 183 | 181 | | 170 | | 183 | 201.5 |
| | | k | | | | | | |
| | **GKR04** | 425 | 485 | | | | | |
| | **GKR05** | 479 | 538 | | 573 | 588 | | |
| | **GKR06** | 530 | 590 | | 625 | 640 | 685 | 733 |

| | a | h | $k_8$ | o | p[1] | $p_1$ | q |
|---|---|---|---|---|---|---|---|
| **GKR04** | 36 | 63 | 28 | 189 | 151 | 63 | 80 |
| **GKR05** | 40 | 80 | 47.5 | 250.5 | 181 | 82 | 105 |
| **GKR06** | 51 | 100 | 54 | 307 | 226 | 100 | 126.5 |

| | d[2] | $d_1$ | l | $l_1$ | $l_2$ | u | t[3] | $i_2$ | $o_1$[1] | $a_2$ | $b_2$ | $c_2$ | $e_2$ | $f_2$ | $s_2$ |
|---|---|---|---|---|---|---|---|---|---|---|---|---|---|---|---|
| | H7 | | | | | JS9 | +0,2 | | | | j7 | | | | |
| **GKR04** | 20<br>25 | 30<br>35 | 120<br>120 | 105<br>105 | 25<br>25 | 6<br>8 | 22.8<br>27 | 20<br>20 | 140<br>140 | 120<br>160 | 80<br>110 | 8<br>8 | 100<br>130 | 3<br>3.5 | 7<br>9 |
| **GKR05** | 30<br>35 | 50<br>50 | 143<br>143 | 127<br>127 | 25<br>25 | 8<br>10 | 33.3<br>38.3 | 33.5<br>33.5 | 176.5<br>176.5 | 160<br>200 | 110<br>130 | 12<br>12 | 130<br>165 | 3.5<br>3.5 | 9<br>11 |
| **GKR06** | 40<br>45 | 65<br>65 | 170<br>170 | 150<br>150 | 30<br>30 | 12<br>14 | 43.3<br>48.8 | 41.5<br>41.5 | 211.5<br>211.5 | 200<br>250 | 130<br>180 | 12<br>12 | 165<br>215 | 3.5<br>4 | 11<br>14 |

[1] $k_2$ !
[2] $l_2$ !
[3] d = 25 mm > DIN 6885/3



www.redukt-mex.ru

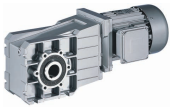

## Dimensions

**GKR□□-2M V□R**

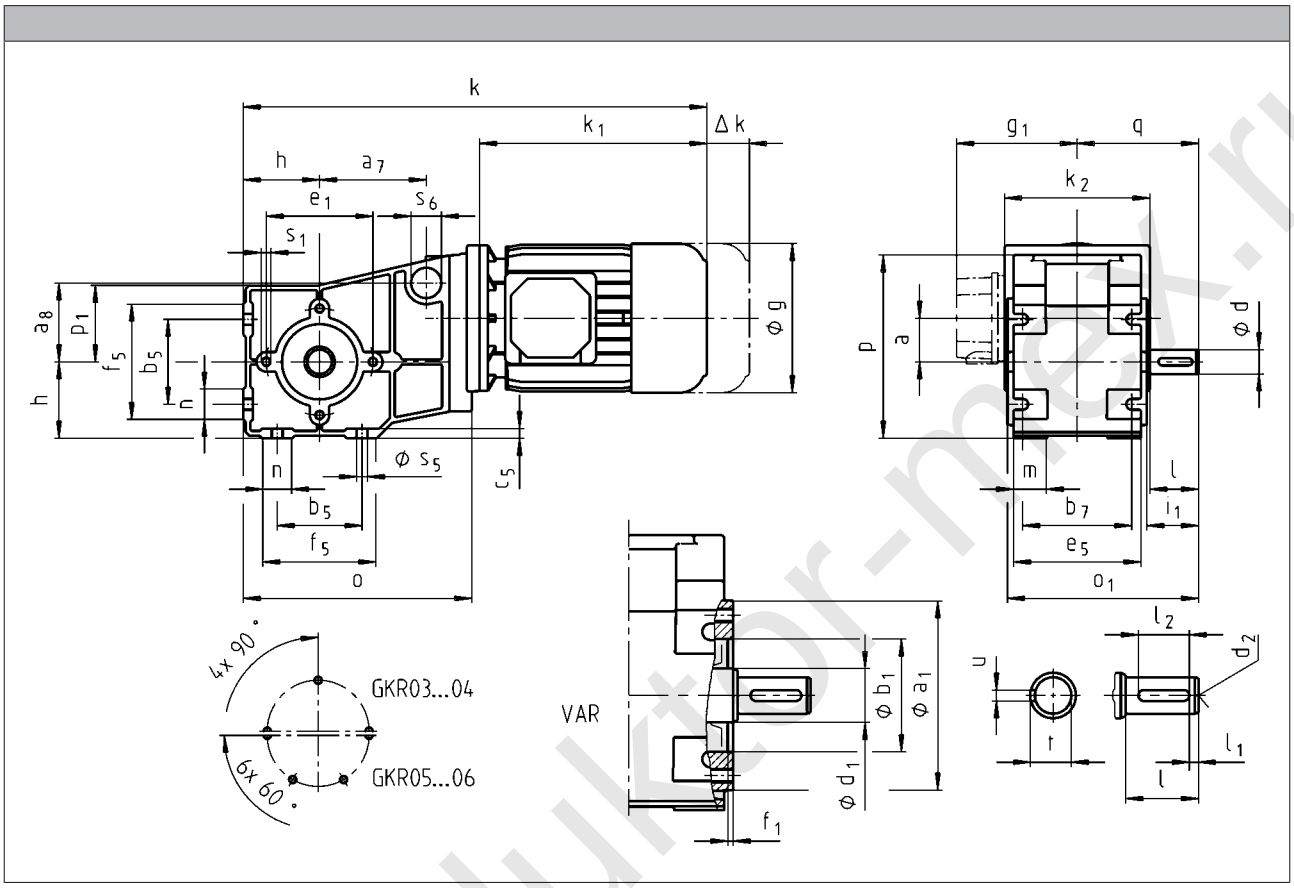


www.redukt0r-mex.ru

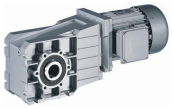

| | | 080C32 | 090C12 | 090C32 | 100C12 | 100C32 | 112C22 | 132C12<br>132C22 |
|---|---|---|---|---|---|---|---|---|
| g | | 156 | 176 | | 194 | | 218 | 258 |
| $g_1$ | MHEMAXX | 150 | 152 | 157 | 166 | | 176 | 195 |
| | MHEMABR | 132 | 137 | | 147 | | 158 | 187 |
| $k_1$ | MHEMAXX | 224.5 | 274 | | 309 | 324 | 363 | 403 |
| $k_2$ | | 145 | 180 | | | | 222 | 265 |
| Δ k | MHEMABR | 73 | 68 | | 76 | | 90 | 109.5 |
| | MHFMAXX | 128 | | | 109 | | 102 | 115 |
| | MHFMABR | 183 | 181 | | 170 | | 183 | 201.5 |
| | | k | | | | | | |
| | **GKR04** | 425 | 485 | | | | | |
| | **GKR05** | 479 | 538 | | 573 | 588 | | |
| | **GKR06** | 530 | 590 | | 625 | 640 | 685 | 733 |

| | a | $a_7$ | $a_8$ | h | o | p[1] | $p_1$ | q | $s_6$ |
|---|---|---|---|---|---|---|---|---|---|
| **GKR04** | 36 | 88 | 65 | 63 | 189 | 151 | 63 | 100 | 25 |
| **GKR05** | 40 | | | 80 | 250.5 | 181 | 82 | 131.5 | |
| **GKR06** | 51 | | | 100 | 307 | 226 | 100 | 155 | |

| | d | $d_1$ | $d_2$ | l | $l_1$ | $l_2$ | u | t | $i_1$ | $o_1$[1] | $a_1$ | $b_1$ | $e_1$ | $f_1$ | $s_1$ |
|---|---|---|---|---|---|---|---|---|---|---|---|---|---|---|---|
| | k6 | | | | | | | | | | | J7 | | | |
| **GKR04** | 20 | 30 | M6 | 40 | 5 | 28 | 6 | 22.5 | 42.5 | 158 | 104 | 62 | 88 | 3 | M8x16 |
| **GKR05** | 30 | 50 | M10 | 60 | 6 | 45 | 8 | 33 | 64 | 199 | 116 | 80 | 100 | 4 | M8x15 |
| **GKR06** | 35 | 65 | M12 | 70 | 7 | 56 | 10 | 38 | 75 | 235 | 140 | 100 | 120 | 4 | M10x22 |

| | $b_5$ | $b_7$ | $c_5$ | $e_5$ | $f_5$ | m | n | $s_5$ |
|---|---|---|---|---|---|---|---|---|
| **GKR04** | 70 | 90 | 8 | 105 | 95 | 28 | 25 | 9 |
| **GKR05** | 100 | 100 | 11 | 115 | 138 | 27 | 48 | 9 |
| **GKR06** | 120 | 125 | 12 | 145 | 164 | 32 | 53 | 11 |

[1] $k_2$ !

www.redukto-mex.ru

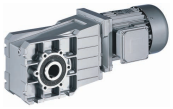

## Dimensions

**GKR□□-2M VAK**

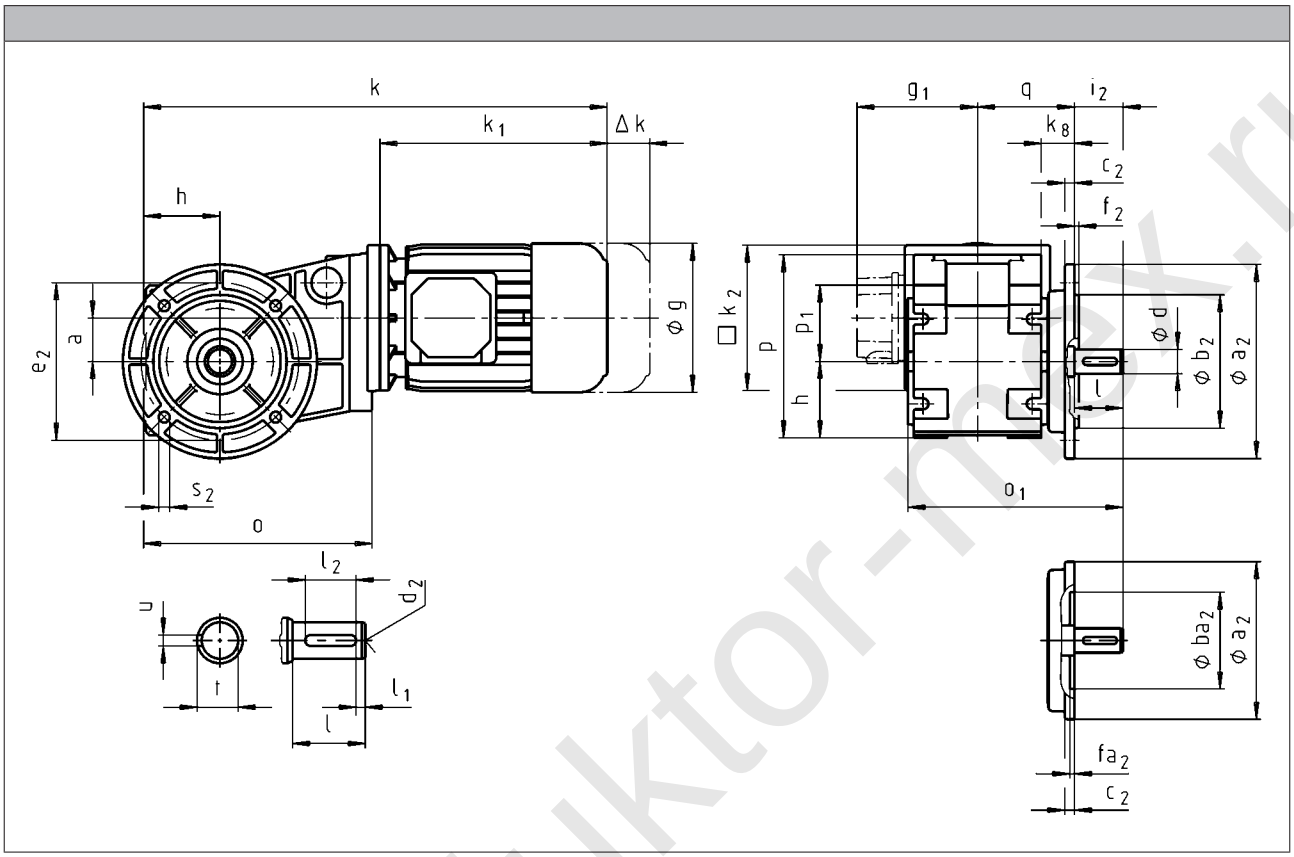


www.reduktor-mex.ru

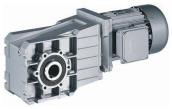

| | | 080C32 | 090C12 | 090C32 | 100C12 | 100C32 | 112C22 | 132C12<br>132C22 |
|---|---|---|---|---|---|---|---|---|
| g | | 156 | 176 | | 194 | | 218 | 258 |
| $g_1$ | MHEMAXX | 150 | 152 | 157 | 166 | | 176 | 195 |
| | MHEMABR | 132 | 137 | | 147 | | 158 | 187 |
| $k_1$ | MHEMAXX | 224.5 | 274 | | 309 | 324 | 363 | 403 |
| $k_2$ | | 145 | 180 | | | | 222 | 265 |
| Δ k | MHEMABR | 73 | 68 | | 76 | | 90 | 109.5 |
| | MHFMAXX | 128 | | | 109 | | 102 | 115 |
| | MHFMABR | 183 | 181 | | 170 | | 183 | 201.5 |
| | | k | | | | | | |
| | **GKR04** | 425 | 485 | | | | | |
| | **GKR05** | 479 | 538 | | 573 | 588 | | |
| | **GKR06** | 530 | 590 | | 625 | 640 | 685 | 733 |

| | a | h | $k_8$ | o | p[1] | $p_1$ | q |
|---|---|---|---|---|---|---|---|
| **GKR04** | 36 | 63 | 28 | 189 | 151 | 63 | 80.5 |
| **GKR05** | 40 | 80 | 47.5 | 250.5 | 181 | 82 | 105 |
| **GKR06** | 51 | 100 | 54 | 307 | 226 | 100 | 126.5 |

| | d | $d_2$ | l | $l_1$ | $l_2$ | u | t | $i_2$ | $o_1$[1] | $a_2$ | $b_2$ | $c_2$ | $e_2$ | $f_2$ | $s_2$ |
|---|---|---|---|---|---|---|---|---|---|---|---|---|---|---|---|
| | k6 | | | | | | | | | | j7 | | | | |
| **GKR04** | 20 | M6 | 40 | 5 | 28 | 6 | 22.5 | 40 | 178 | 120<br>160 | 80<br>110 | 8<br>8 | 100<br>130 | 3<br>3.5 | 7<br>9 |
| **GKR05** | 30 | M10 | 60 | 6 | 45 | 8 | 33 | 60 | 232.5 | 160<br>200 | 110<br>130 | 12<br>12 | 130<br>165 | 3.5<br>3.5 | 9<br>11 |
| **GKR06** | 35 | M12 | 70 | 7 | 56 | 10 | 38 | 70 | 276.5 | 200<br>250 | 130<br>180 | 12<br>12 | 165<br>215 | 3.5<br>4 | 11<br>14 |

[1] $k_2$ !

www.redukto-mex.ru

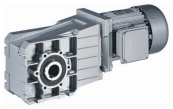

www.reduktor-mex.ru

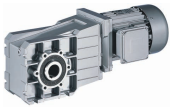

## Hollow shaft with shrink disc

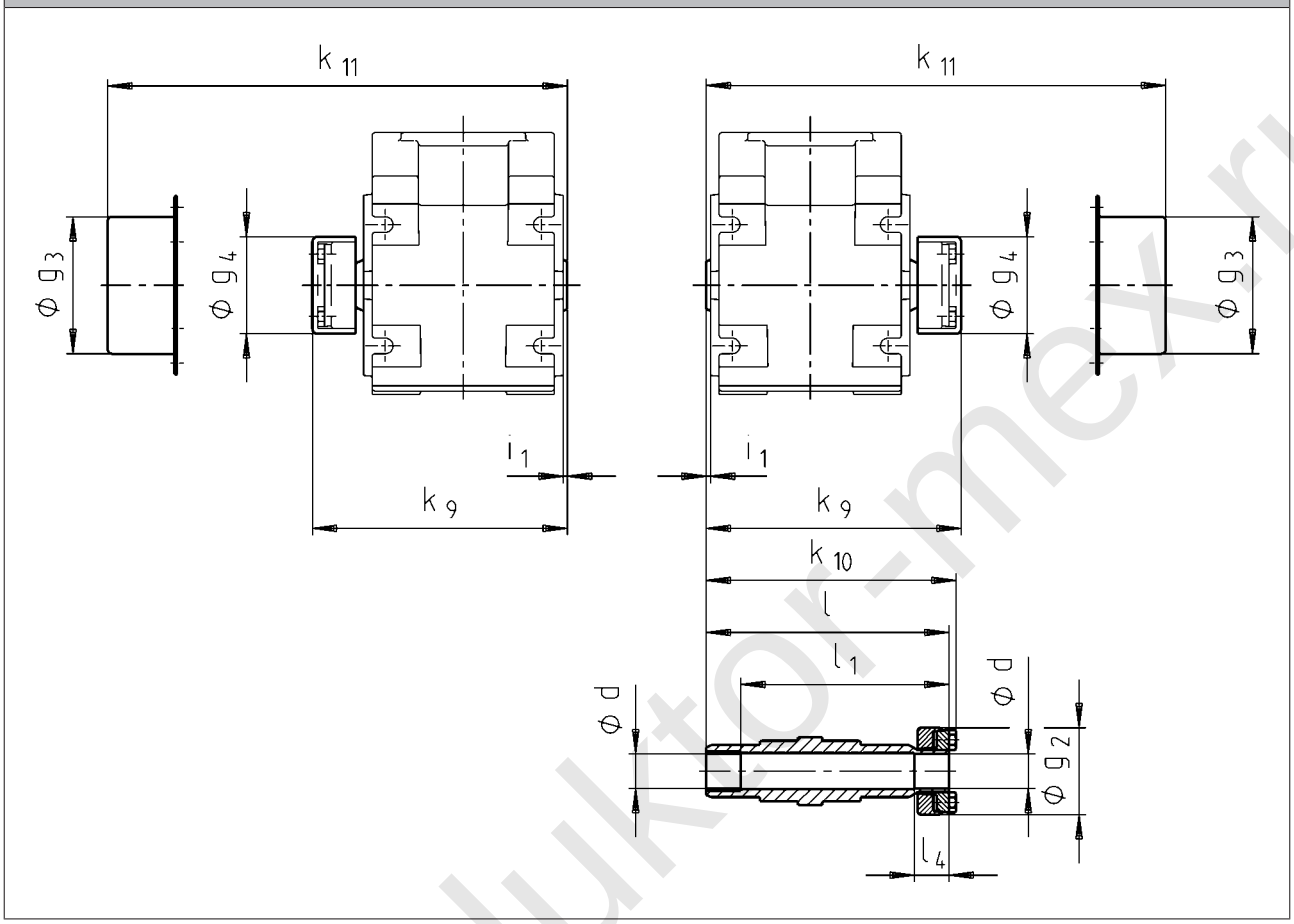


| | d [1] | $g_2$ | $g_3$ | $g_4$ | $i_1$ | $k_9$ | $k_{10}$ | $k_{11}$ | l | $l_1$ | $l_4$ |
|---|---|---|---|---|---|---|---|---|---|---|---|
| | h6 | | | | | | | | | | |
| GKR03 | 20 | 50 | 65 | 54 | 2.5 | 126 | 124 | 138 | 120 | 100 | 20 |
| GKR04 | | | | | | 146 | 144 | 158 | 144 | 120 | |
| GKR05 | 30<br>35 | 80 | 90 | 84 | 4.0 | 176 | 177 | 182 | 171 | 151 | 28 |
| GKR06 | 40 | 90 | 100 | 94 | 5.0 | 202 | 210 | 214 | 204 | 174 | 30 |

[1] Machine shaft design.

- ► Output flange and hollow shaft with shrink disc (output version SAK) are not possible in the same location. For additional dimensions see output version H□□.
- ► Ensure that the strength of the machine shaft material is adequate in shrink disc designs.
  When using typical steels (e.g. C45, 42CrMo4), the torques listed in the selection tables can be used without restriction.
  Please consult us if you wish to use material that is considerably weaker. Medium surface roughness Rz must not exceed 15 µm (turning is sufficient).



www.redukt-or-mex.ru

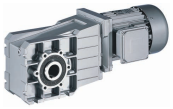

**Mounting set for hollow shaft circlip:**
**Proposed design for auxiliary tools**

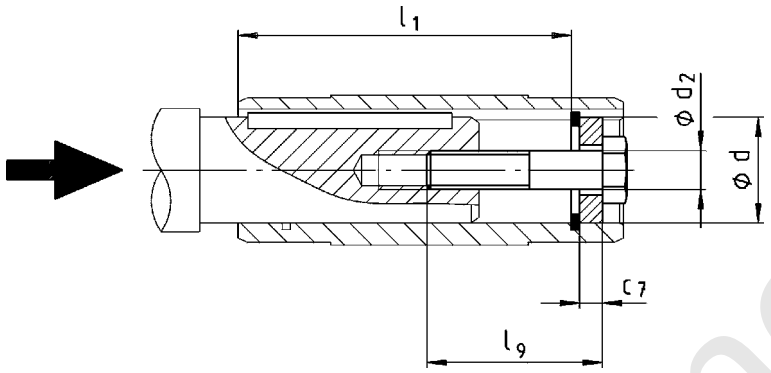


| | d | $l_1$ | $d_2$ | $l_9$ | $c_7$ |
|---|---|---|---|---|---|
| | H7 | | | | |
| GKR03 | 18<br>20 | 85 | M6 | 40 | 4 |
| GKR04 | 20<br>25 | 105 | | | |
| | | | M10 | | 5 |
| GKR05 | 30<br>35 | 127 | | | 6 |
| | | | M12 | 50 | 7 |
| GKR06 | 40<br>45 | 150 | M16 | 60 | 8 |
| | | | | | 9 |

www.redukto r-mex.ru

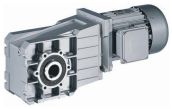

## Hoseproof hollow shaft cover

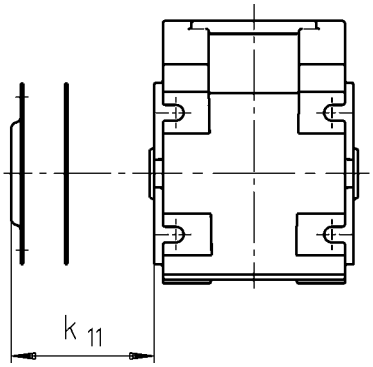


► Cover including gasket

| | $k_{11}$ |
|---|---|
| | [mm] |
| GKR03 | 9 |
| GKR04 | |
| GKR05 | 10 |
| GKR06 | 11 |

## Gearbox with 2nd output shaft end

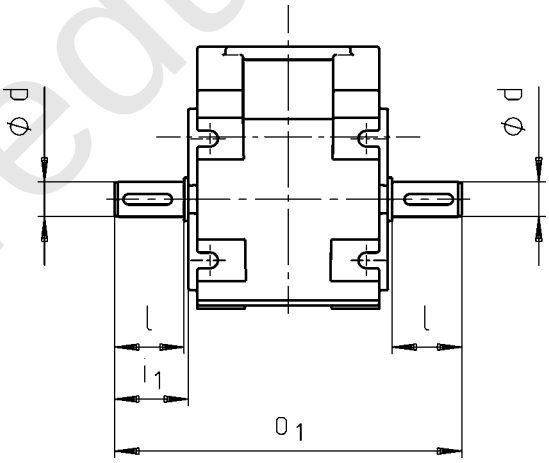


| | d | l | $i_1$ | $o_1$ |
|---|---|---|---|---|
| | k6 | | | |
| | [mm] | [mm] | [mm] | [mm] |
| GKR03 | 20 | 40 | 42.5 | 180 |
| GKR04 | | | | 200 |
| GKR05 | 30 | 60 | 64.0 | 263 |
| GKR06 | 35 | 70 | 75.0 | 310 |



www.reduktor-mex.ru

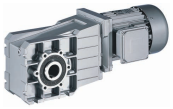

## Rubber buffer for torque plate

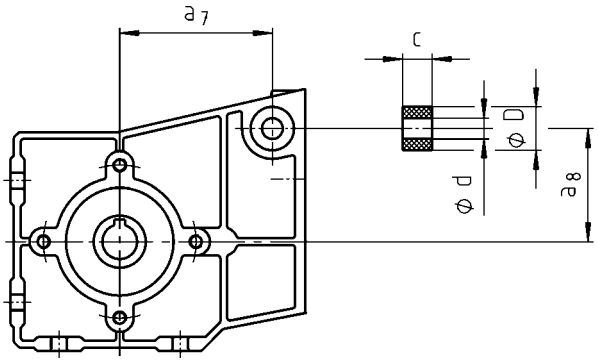


| | d | D | c | $a_7$ | $a_8$ |
|---|---|---|---|---|---|
| GKR03 | 10 | 25 | 13.0 | 66.0 | 39 |
| GKR04 | | | | 88.0 | 65 |

www.reduktor-mex.ru

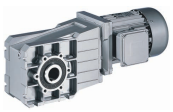

## Torque plate on threaded pitch circle

**In position 3**

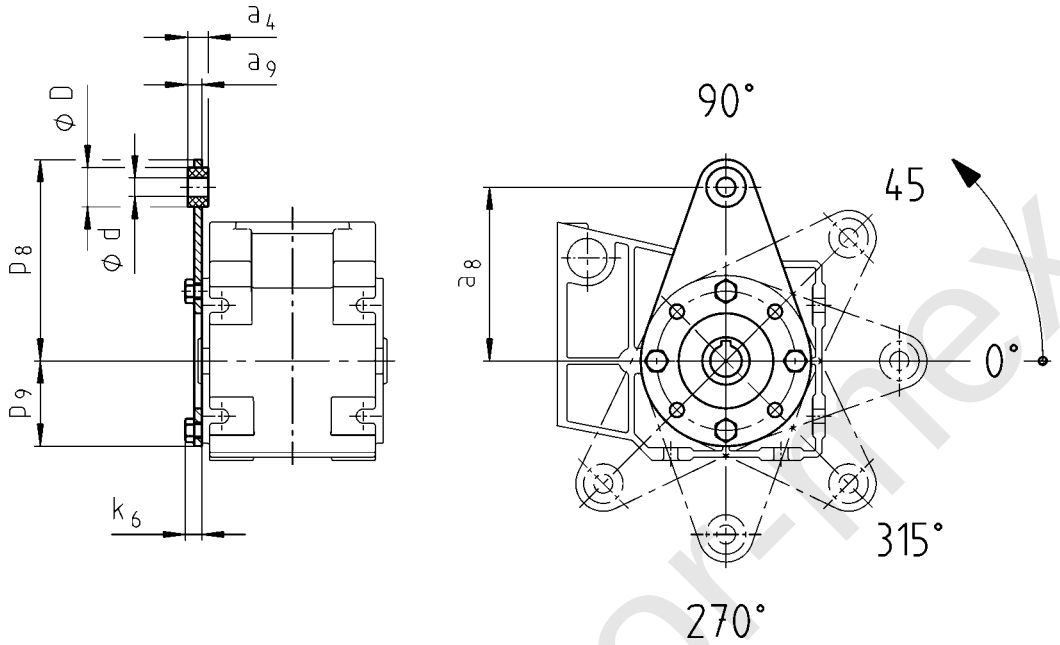


**In position 5**

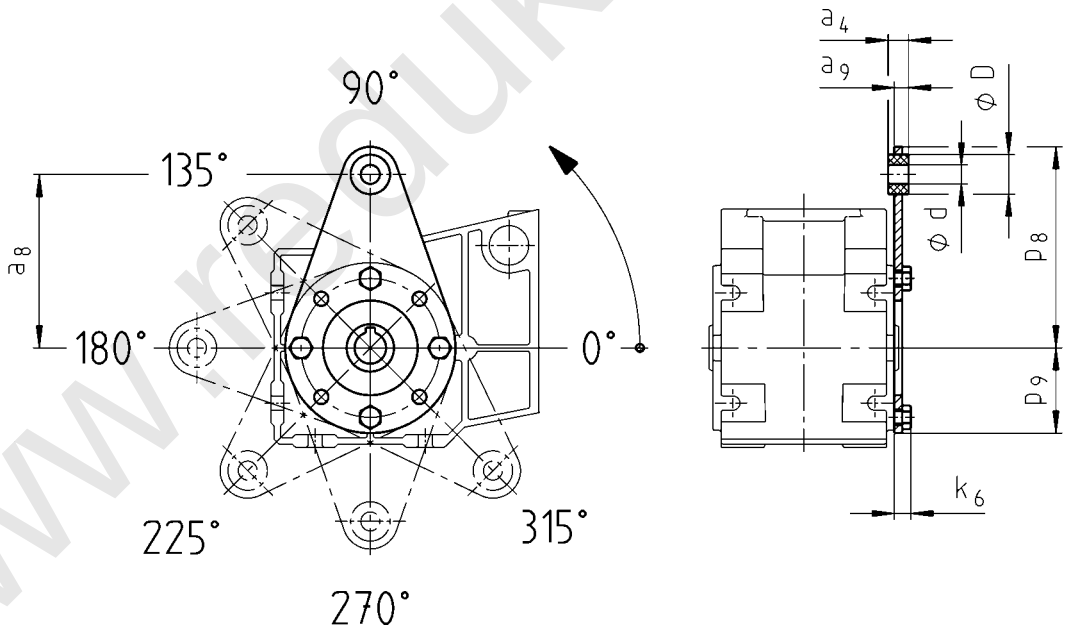


| | $a_4$ | $a_8$ | $a_9$ | d | D | $k_6$ | $p_8$ | $p_9$ |
|---|---|---|---|---|---|---|---|---|
| GKR03 | 12 | 100 | 8.0 | 8 | 20 | 9 | 115 | 42 |
| GKR04 | 13 | 110 | 9.0 | 10 | 25 | 11 | 128 | 54 |

www.redukto-r-mex.ru

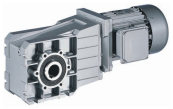

## Torque plate on threaded pitch circle

**In position 3**

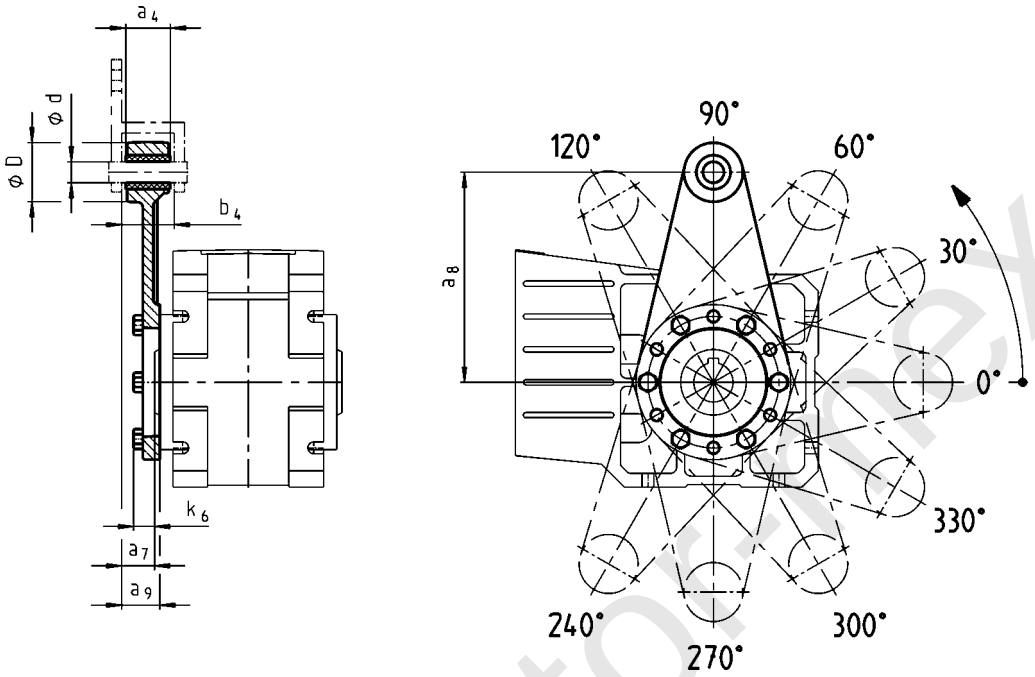


**In position 5**

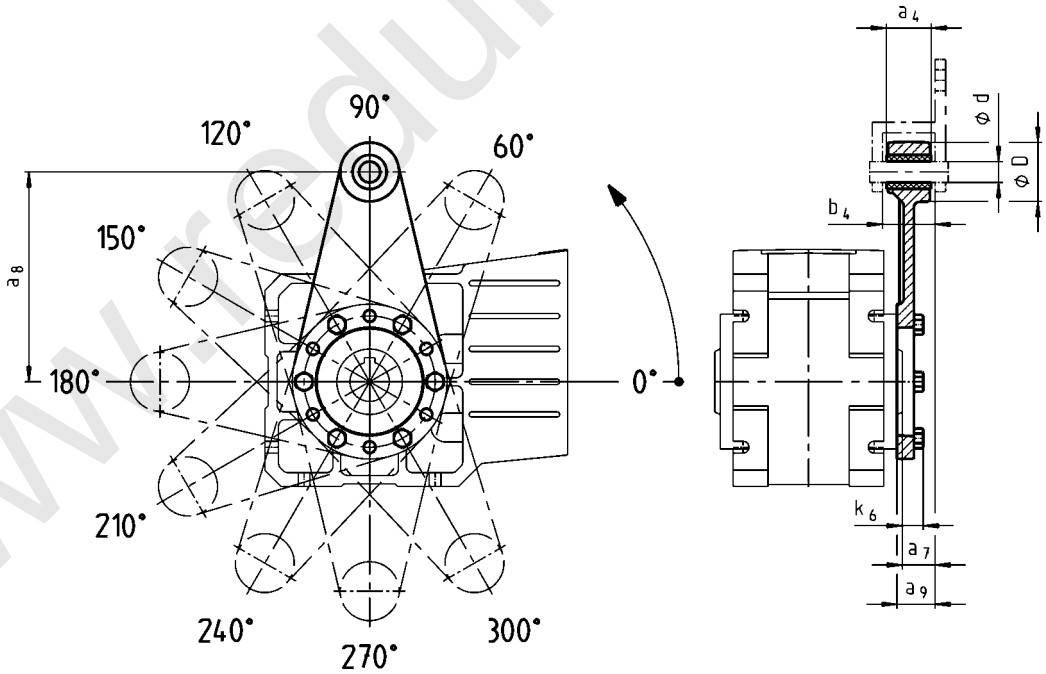


| | $a_4$ | $a_7$ | $a_8$ | $a_9$ | $b_4$ | d | D | $k_6$ |
|---|---|---|---|---|---|---|---|---|
| GKR05 | 34 | 23.5 | 160 | 27.5 | 38.5 | 16 | 45 | 15 |
| GKR06 | 40 | 28.0 | 200 | 33.0 | 44.5 | 20 | 50 | 18 |

www.redukto-flex.ru

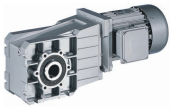

## Torque plate at housing foot

**In position 4 or 6**

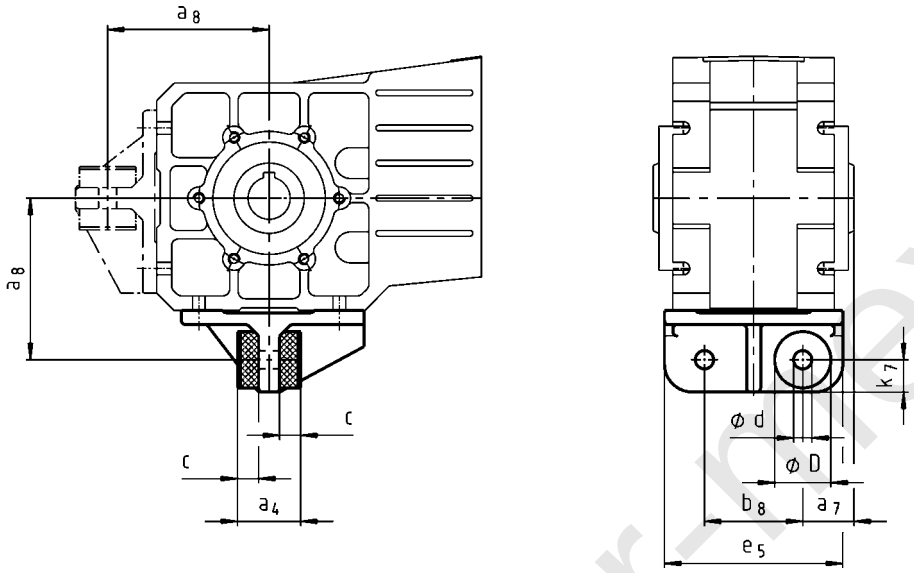


| | $a_4$ | $a_7$ | $a_8$ | $b_8$ | c | d | D | $e_5$ | $k_7$ |
|---|---|---|---|---|---|---|---|---|---|
| GKR05 | 45 | 36.5 | 115 | 70 | 15.0 | 13 | 40 | 127 | 25 |
| GKR06 | 72 | 45.0 | 145 | 80 | 27.0 | 17 | 50 | 145 | 30 |

www.reduktor-mex.ru